PS-22R

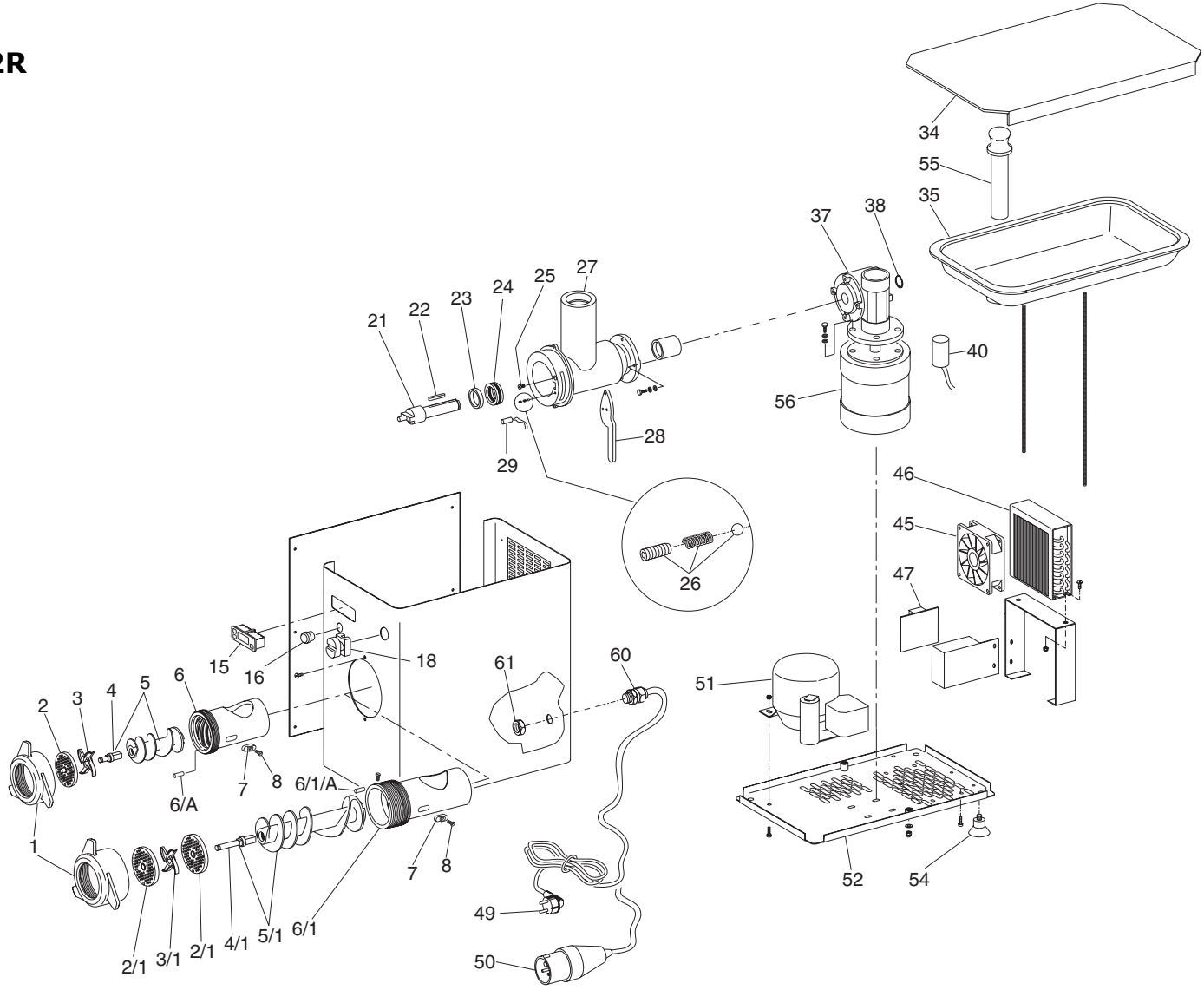
34
55
35
37
38
27
25
24
23
22
21
40
56
28
29
46
45
26
47
15
16
18
61
60
51
2
3
4
5
6
7
8
6/A
6/1/A
1
7
8
52
54
49
50
2/1
3/1
2/1
4/1
5/1
6/1